WirelessHART pressure transmitter SITRANS P280

Overview

SITRANS P280 for flexible and cost-effective applications in pressure monitoring

- Supports the WirelessHART standard (HART V 7.1)
- Very high security level for wireless data transmission
- Built-in local user interface (LUI) with 3-button operation
- Optimum representation and readability using graphical display (104 x 80 pixels) with integrated backlight
- Stand-by (deep sleep phase) can be activated and deactivated device with push of a button
- Battery power supply
- Battery life time up to 5 years
- Extend battery life time with switch off the HART modem interface
- Optimized power consumption through new design, and increase in battery life time
- Simple configuration thanks to SIMATIC PDM
- Device meets IP65 degree of protection
- Can be used for absolute and gauge pressure measurements

Benefits

The SITRANS P280 is a pressure transmitter that features Wireless HART as the standard communication interface.

Also available is a wired interface to connect a HART modem:

- Flexible pressure measurements
- Save costs on wiring at difficult installation conditions. Wireless technology offers cost advantages in cases where extensive wiring cost would normally apply
- It enables additional hitherto unfeasible measuring points, particularly for monitoring purposes
- Easy installation on moveable equipment
- Enables cost-effective temporary measurements, for example for process optimizations
- Optimum solution in addition to wired communication and new possibilities for system solutions in process automation

Application

The SITRANS P280 is a WirelessHART field device for measuring absolute and gauge pressure.

The measuring ranges for absolute and gauge pressure measurements are 0 to 2, 10, 50, 200 and 400 bar (0 to 29, 145, 725, 2900 and 5800 psi).

The sensor is integrated into the transmitter's housing.

On the wireless communication side, the transmitter supports the WirelessHART standard. A HART modem can be connected to the transmitter particularly for initial commissioning.

It can be used in all industries and applications in non-explosive areas.

Design

The SITRANS P280 has a robust aluminum enclosure and is suitable for outside use. It conforms with the IP65 safety class.

The operation temperature range is -40 to +80 °C (-40 to +176 °F). Power supply is provided through an integrated battery, which is available as an accessory. The device is only approved for operation with this battery.

The antenna features a rotatable joint which can be used for directional alignment. Wireless signals can thus be optimally received and transmitted.

A special highlight is tthe possibility can operate directly on the device with 3 push buttons. It fits perfect with the strategy of all new Siemens field devices.

Using the device's push buttons, it is easy to turn the HART modem interface of the device on and off. The device can be put to passive status and reactivated at any time. This helps to extend the life time of the battery.

The SITRANS P280 transmitter features a ceramic measuring cell for gauge and absolute pressure measurements.

Function

The SITRANS P280 can join to a WirelessHART network. It can be parameterized and operated through this network. Measured process values are transmitted via the network to the SIEMENS IE/WSN-PA LINK.

Field device data received by the IE/WSN-PA LINK is transmitted to the connected systems, for example the process control system SIMATIC PCS 7. For an introduction of WirelessHART, please see the FI 01 catalogue Sec. 9 or www.siemens.com/wirelesshart.

Detailed information on IE/WSN-PA LINK can be found in the FI 01 catalogue Sec. 9 or www.siemens.com/wirelesshart.

Integration

Connecting to SIMATIC PCS 7

The integration of field devices in SIMATIC PCS 7 and other process control systems can be now done seamlessly and cost-effectively with wireless technology, especially in situations where high wiring costs may be expected. Of particular interest are measuring points which are to be added and for which no wiring is available.

Where larger distances between the IE/WSN-PA LINK and control systems need to be overcome, this connection can also be implemented on a wireless and cost-effective basis using the SCALANCE W series of products.

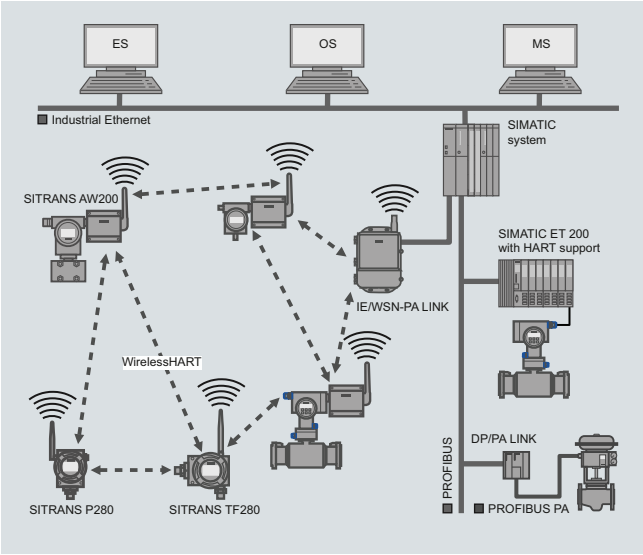

Integration of a meshed network in SIMATIC PCS7

Configuration

Configuration of the SITRANS P280 may be carried out as follows:

- Initial commissioning for the SITRANS P280 with SIMATIC PDM is generally carried out via a HART modem or the integrated local user interface, since the network ID and join key must be set up on the device before it can be accepted and integrated into the WirelessHART network.
- Once it is integrated into the network, the device can be conveniently operated with the WirelessHART network, or onsite with a HART modem or via the local user interface.

Technical specifications

SITRANS P280 WirelessHART Pressure Transmitter	
Mode of operation	
Measuring principle	piezo-resistive
Measured variable	Gauge and absolute pressure
Gauge pressure input	
Measuring range	Overload limit/Bursting pressure
0 ... 2 bar g	5 bar g (72.5 psi g)
0 ... 10 bar g	50 bar g (363 psi g)
0 ... 50 bar g	250 bar g (1740 psi g)
0 ... 200 bar g	650 bar g (7250 psi g)
0 ... 400 bar g	650 bar g (7250 psi g)
Units	mbar, bar, mmH_2O, inH_2O, atm, Torr, gcm^2, $kgcm^2$, mPa, kPa, Pa, psi, mmHG, mmH_2O, ftH_2O, inHG, inH_2O
Absolute pressure input	
Measuring range	Overload limit/Bursting pressure
0 ... 2 bar a	5 bar a (72.5 psi a)
0 ... 10 bar a	50 bar a (363 psi a)
0 ... 50 bar a	250 bar a (1740 psi a)
0 ... 200 bar a	650 bar a (7250 psi a)
0 ... 400 bar a	650 bar a (7250 psi a)
Units	mbar, bar, mmH_2O, inH_2O, atm, Torr, gcm^2, $kgcm^2$, mPa, kPa, Pa, psi, mmHG, mmH_2O, ftH_2O, inHG, inH_2O
Output	
Output signal	2.4 GHz Wireless signal with TSMP (Time Synchronized Mesh Protocol)
Measuring accuracy	as per EN 60770-1
Error in measurement (including hysteresis and repeatability, at 25 °C (77 °F))	max. ± 0.325 % of sensor's span
Long-term drift	max. ≤ 0.25 % of sensor's/ yearly span
Ambient temperature effect	max. ≤ 0.025 %/K of sensor's span
Rated conditions	
Ambient conditions	
Ambient temperature	-40 ... +80 °C (-40 ... +176 °F) (in ambient temperatures below -20 °C (-4 °F) and above +70 °C (158 °F), readability of the display is limited.)
Storage temperature	-40 ... +85 °C (-40 ... +185 °F)
Relative humidity	< 95 %
Climatic class	4K4H in accordance with EN 60721-3-4 (stationary use at locations not protected against weather)
Degree of protection	IP65/NEMA 4

WirelessHART pressure transmitter SITRANS P280

Design	
Enclosure material	low-copper die-cast aluminum, GD-AlSi12
Shock resistance	in accordance with DIN EN 60068-2-29 / 03.95
Resistance to vibration	in accordance with DIN EN 60068-2-6/ 12.07 20 ≤ f ≤ 2000 Hz 0.01 g^2/Hz
Weight	
• without battery	1.5 kg (3.31 lb)
• with battery	1.6 kg (3.53 lb)
Dimensions (W x H x D)	See Dimensional drawing
Process connection	• G½B male thread as per EN 837-1 • ½-14 NPT
Sensor break	Is recognized
• Displays and controls	
Display (with illumination)	
• Size of display	104 x 80 pixels
• Number of digits	adjustable
• Number of spaces after comma	adjustable
Setting options	• on site with 3 push buttons • with SIMATIC PDM or HART Communicator
Auxiliary power	
Battery	3.6 V DC
Communication	
Radio	WirelessHART V7.1 conforming
Transmission frequency band	2.4 GHz (ISM-Band)
Transmission range under reference conditions	Up to 250 m (line of sight) in outside areas Up to 50 m (greatly dependent on obstacles) in inside areas
Communication interfaces	• HART communication with HART modem • WirelessHART
Certificates and approvals	
Wireless communication approvals	R&TTE FCC
Classification according to PED 97/23/EC	Gases: Fluid group 1 Liquids: Fluid group 1; meets requirements as per Section 3, Subsection 3 (good engineering practice)

Selection and ordering data	Order No.
SITRANS P280 WirelessHART pressure transmitter ▶	**7MP1120-** ■■■■ ■■■ **0**
(Required battery not included with delivery, see accessories)	
Measuring cell filling	
Dry measuring cell	**0**
Measuring span	
Gauge pressure	
0 ... 2 bar g (0 ... 29 psi g)	**D**
0 ... 10 bar g (0 ... 145 psi g)	**E**
0 ... 50 bar g (0 ... 725 psi g)	**F**
0 ... 200 bar g (0 ... 2900 psi g)	**G**
0 ... 400 bar g (0 ... 5800 psi g)	**H**
Absolute pressure	
0 ... 2 bar a (0 ... 29 psi a)	**M**
0 ... 10 bar a (0 ... 145 psi a)	**N**
0 ... 50 bar a (0 ... 725 psi a)	**P**
0 ... 200 bar a (0 ... 2900 psi a)	**Q**
0 ... 400 bar a (0 ... 5800 psi a)	**R**
Wetted parts	
Ceramic	**K**
Display	
Digital display, visible	**1**
Enclosure	
Die-cast aluminum	**1**
Process connection	
G½ as per EN 837-1	**0**
½-14 NPT	**1**
Explosion protection	
Without	**A**
Antenna	
Variable, attached to device	**A**
Further designs	Order code
Please add "-Z" to Order No. and specify Order code(s) and plain text.	
Measuring point number (TAG Nr.) max. 16 digits entered in plain text Y15:	**Y15**
Measuring point message max. 27 characters entered in plain text: Y16:	**Y16**
Accessories	
Lithium battery for SITRANS TF280/P280 ▶	**7MP1990-0AA00**
Mounting bracket, steel	**7MF4997-1AC**
Mounting bracket, stainless steel ▶	**7MF4997-1AJ**
Cover, die-cast aluminum, without window	**7MF4997-1BB**
Cover, die-cast aluminum, with window ▶	**7MF4997-1BE**
IE/WSN-PA LINK	**see Sec. 9**
HART modem with RS232 interface ▶	**7MF4997-1DA**
HART modem with USB interface ▶	**7MF4997-1DB**
SIMATIC PDM	**see Sec. 9**

▶ Available ex stock

Dimensional drawings

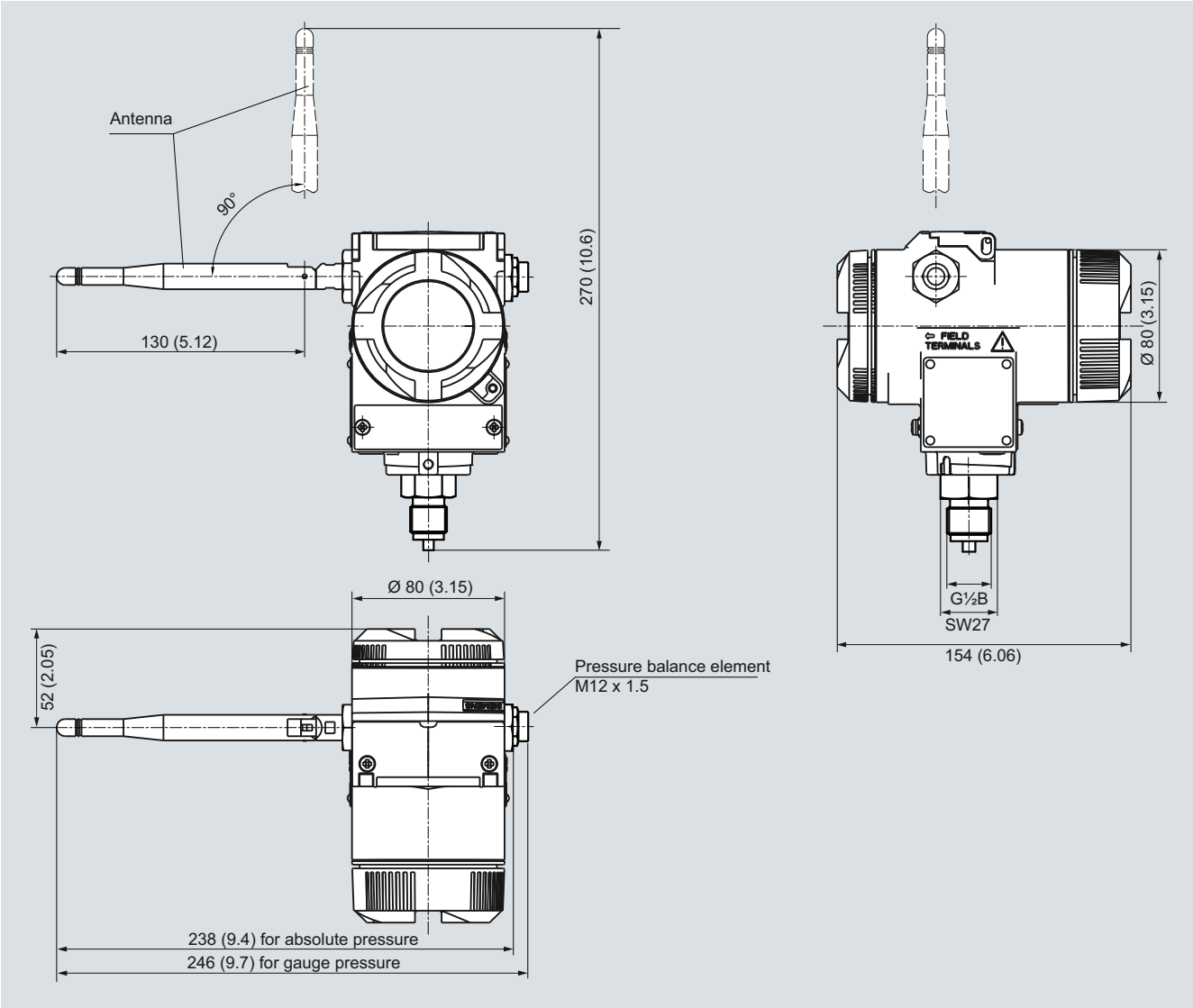

SITRANS P280 WirelessHART pressure transmitter, process connection G½", dimensions in mm (inch)

WirelessHART pressure transmitter SITRANS P280

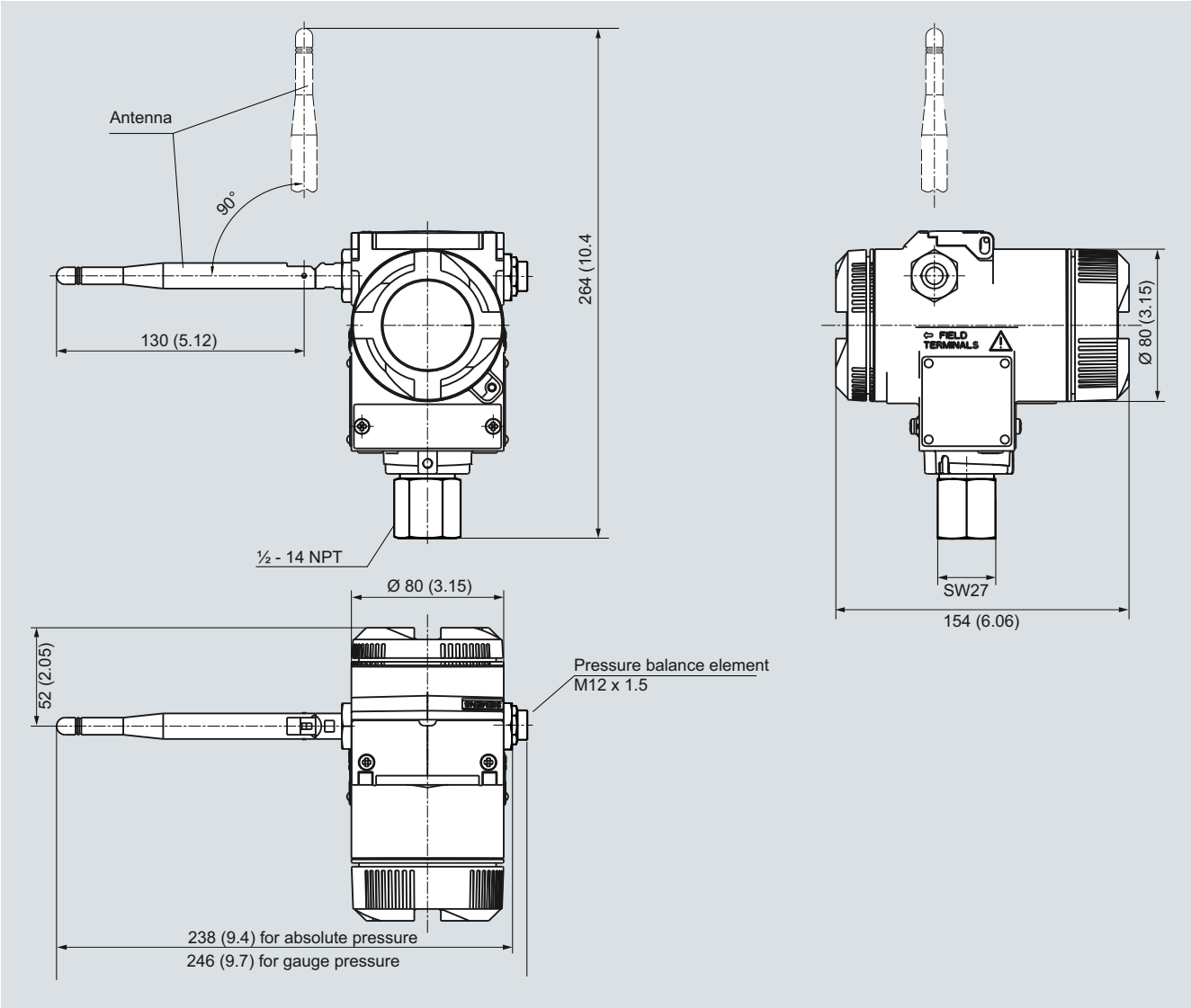

SITRANS P280 WirelessHART pressure transmitter, process connection ½ - 14 NPT, dimensions in mm (inch)