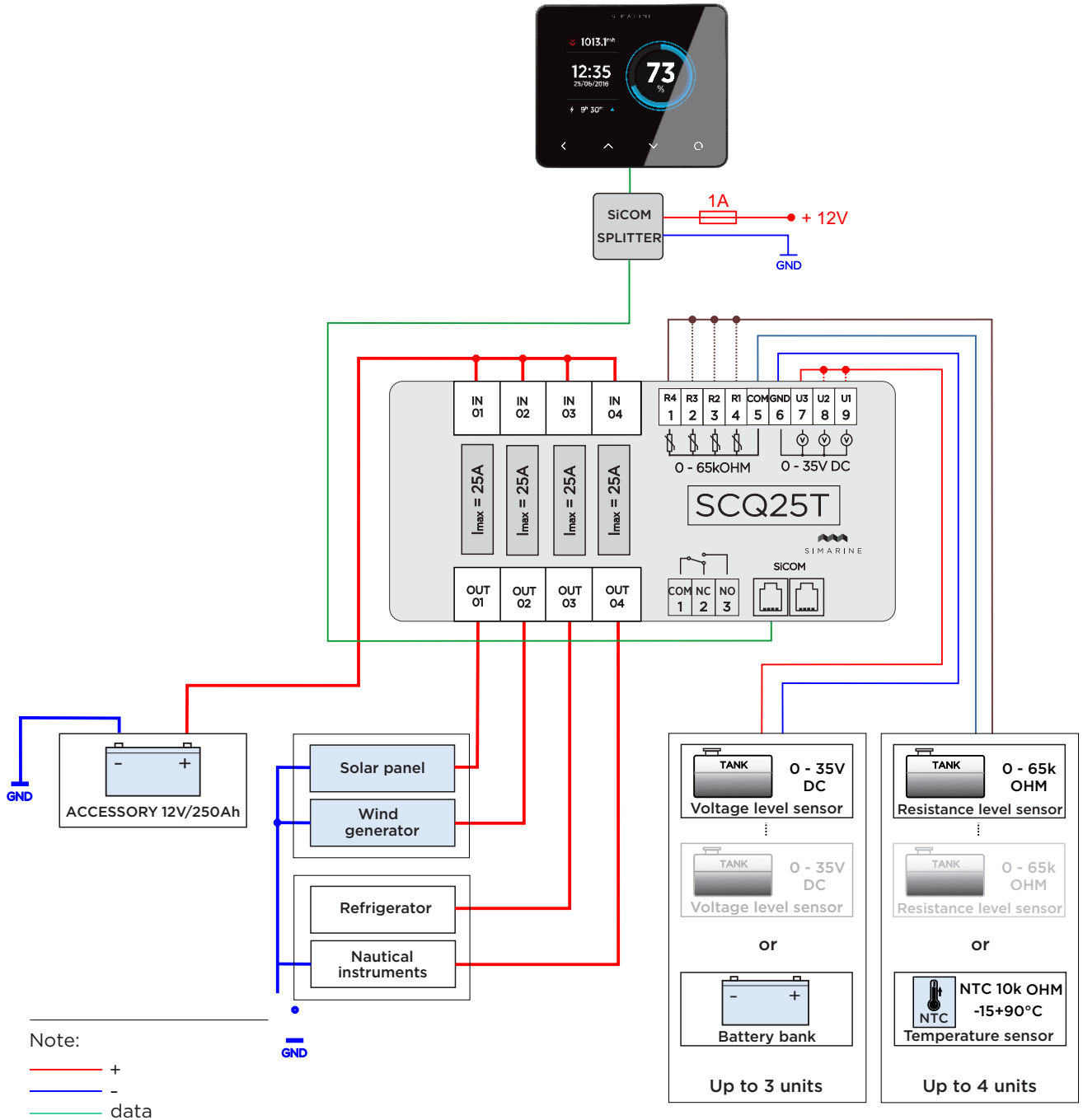
1013.1mb
12:35
25/06/2018
9° 30"
73
%
SiCOM
SPLITTER
1A
+ 12V
GND
IN 01
IN 02
IN 03
IN 04
Imax = 25A
Imax = 25A
Imax = 25A
Imax = 25A
OUT 01
OUT 02
OUT 03
OUT 04
R4 1
R3 2
R2 3
R1 4
COM 5
GND 6
U3 7
U2 8
U1 9
0 - 65kOHM
0 - 35V DC
SCQ25T
SIMARINE
SiCOM
COM 1
NC 2
NO 3
GND
ACCESSORY 12V/250Ah
Solar panel
Wind generator
Refrigerator
Nautical instruments
GND
TANK
0 - 35V DC
Voltage level sensor
TANK
0 - 35V DC
Voltage level sensor
or
Battery bank
Up to 3 units
TANK
0 - 65k OHM
Resistance level sensor
TANK
0 - 65k OHM
Resistance level sensor
or
NTC
NTC 10k OHM
-15+90°C
Temperature sensor
Up to 4 units
Note:
+
-
data
resist./temp. +
resist./temp. -
alternative